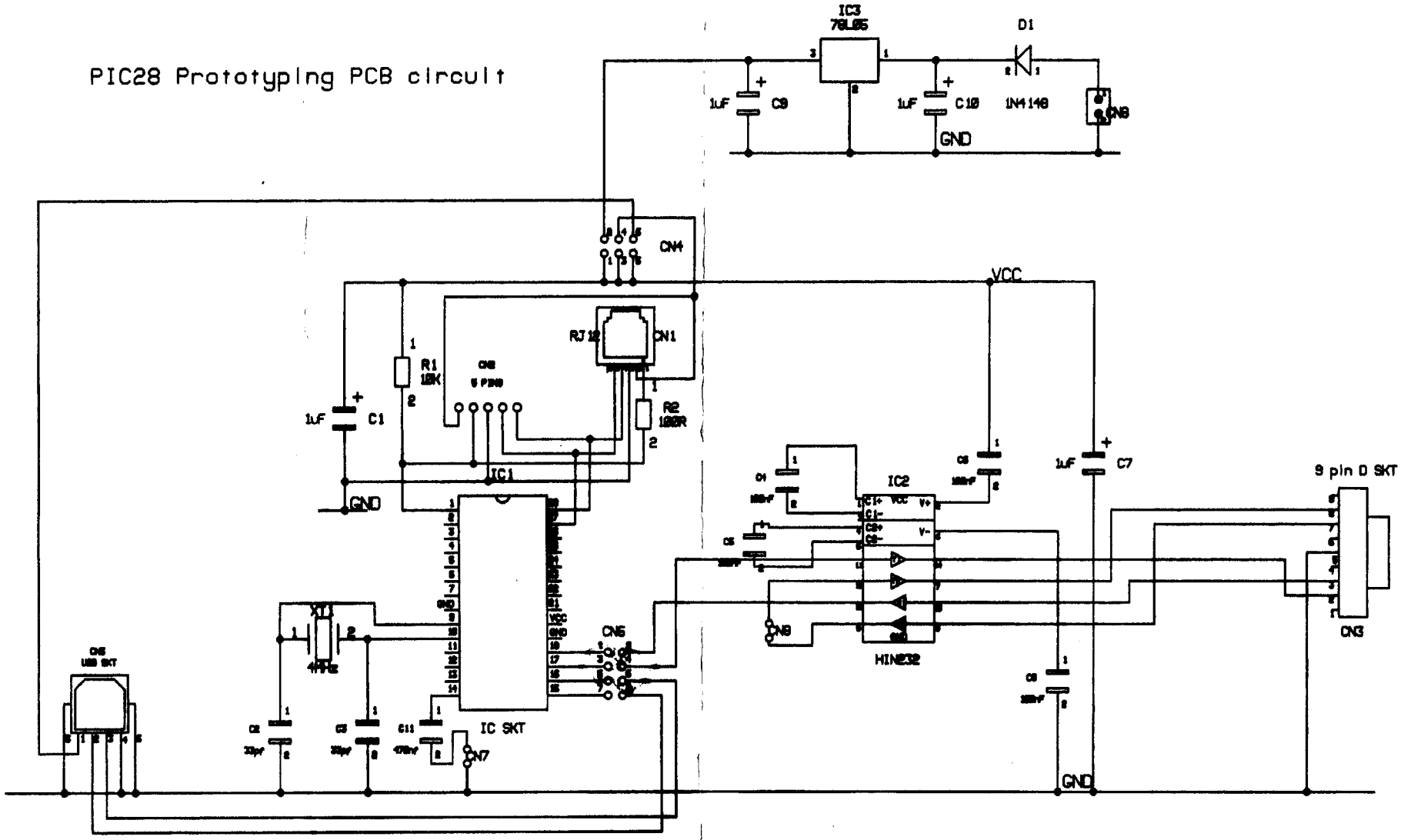PIC28 Prototyping PCB circuit